COVERS THE FIELD FOR '66

CUSTOMER-KEYED TO MEET THE BIG "UPGRADE" DEMAND

REC. NOV. 8, 1965

V-3

Sales Forecast! Great!

from city to suburb with Atlas Aire Customer-Keyed Mowers

Coming up! Greatest year yet for power mowers. Consumer sales of 4.2 million units slated for 1965—up 5%. Even more on tap for '66. What's your share of the market? Atlas Aire says **MORE!** Substantially more . . . with the finest line of mowers ever. **Customer-keyed** to meet the big "upgrade" demand at competitive prices.

Customer-keyed means each brand new Atlas Aire mower for '66 offers a perfect combination of fine features exactly keyed to your customer's individual demands . . . exactly keyed to his pocketbook, too. Atlas Aire keeps you fully competitive . . . fully equipped!

What are today's most wanted features? Check the top trade journals and your own experience. Now check Atlas Aire for '66. **New Grass Jet Design** picks up and directs clippings out to the right rear in a steady stream for non-clog, non-stop mowing in heaviest conditions. **Safety!** All Atlas Aire mowers are designed for safe operation . . . they surpass the rigid requirements that entitle them to bear the ASA SEAL OF SAFETY. **Catchers!** Efficient, custom-fitted catchers available for most models. **More height adjustments.** Atlas Aire now offers **5-Position Quick-A-Matic** wheel adjustment on most heart-of-the-line models.

Look over the entire Atlas Aire line. Check the new Grass Jet Series H models especially . . . solid, good-looking mowers—including a brand new electric model—with more selling features at a price your "trade-up" customer can't afford to pass up! One of the finest values in their class today. Sound-selling Atlas Aire Compacts. Heavy Duty model. Reels, Riders. Commercial/Institutional. And the totally new Atlas Aire Big Wheel Country Gentleman Estate Mower. Plus a complete tiller line and edger-trimmer! All **customer-keyed** sales and profit makers.

From city to suburb . . . you're ready with Atlas Aire. Buy now. Next spring . . . promote your store as headquarters for mowers for every purpose. Use Atlas Aire to keynote your entire garden center business, too. Remember, you sell Atlas Aire backed up by a solid 6-Point Program . . .

1. established record of quality and dependable performance. 2. sales and factory personnel pledged to your satisfaction. 3. a thoroughly established and respected brand name—always respected—never compromised. 4. sold only through selected distribution channels. 5. products produced to master competition in every price field. 6. continuing consumer advertising and dealer sales aids.

More Models . . . More Features . . .
More Competitive Edge with Atlas Aire

• 4 new Grass Jet Rotaries • new Grass Jet Electric • Rider • 5 Staggered Wheel Rotary Compacts • 2 Self-Propelled Reels • Heavy Duty Rotary • Commercial/Institutional • all-new Grass Jet Big Wheel Country Gentleman Estate Mowers • 3 Heavy-Duty Tillers • Edger/Trimmer • Plus 3 Bellaire Economy Model Rotaries

Exciting New Customer-Keyed Sales Aids Too
Plan BIG for Spring with Atlas Aire

Atlas Aire National Advertising
WHERE YOU ARE!
Now In The BEST Customer Home and Garden Care Magazines

Flower and Garden · Flower Grower The Home Garden · Better Homes & Gardens GARDEN IDEAS for 1966 · House & Garden · House Beautiful · Better Homes and Gardens

INDUSTRY DEVELOPMENT PROGRAM · THE NATIONAL POWER EQUIPMENT DEALERS ASSOCIATION · CONTRIBUTOR 1965

21″ austempered
. Briggs & Stratton.
Lo Stor-Mower fea-
on handle. Safety
pelled models dis-
ned down for turns
uge steel. **Chute:**
/chute. **Dual Pur-**
: Attaches quickly
mpered steel rake-
Steel rim, painted
s. **Wheel Bearings:**
ated ball bearings.
contrasting Starline
7 available for all

NTY—The mower
deck against de-
under normal use
cial and/or rental
ranty being limited
authorized service
ereof which shall,
such deck to the
us or authorized
TATION CHARGES
ition shall disclose
en thus defective,
lieu of all other
and of all other
art.

es

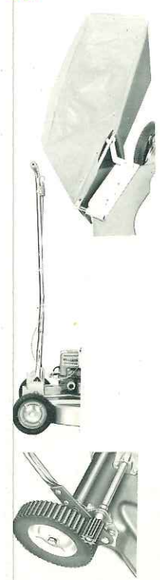

i 63115

Brand New Atlas Aire GRASS JET SERIES Series H ELECTRIC

WITH EXCLUSIVE "CORDTENDER"

Now . . . a smooth, quiet, *powerful* Electric to round out your trade-up line. The new Grass Jet Series HE20 by Atlas Aire. And what an electric it is! One of the most powerful on the market with a famous General Electric 120-volt 1¼-H.P. motor and special gear reduction drive. The HE20 delivers *all* the fine Series H features appropriate to electric power. Plus built-in heavy-duty switch . . . mounted on the handle for safety and convenience. Handle-mounted cord-holding Cordtender for easy handling on turns, too. 100 feet of fully-insulated extra-heavy 14-gauge 3-wire cord is supplied as standard equipment . . . complete with 3-prong ground-type plug. Runs easily on household current. Protected against jamming by special slip clutch. Beautiful stylized motor housing in Starline White.

NEW ATLAS CORDTENDER—Convenience has been emphasized throughout in designing the new Atlas Aire HE20. New "Cordtender" cross-over arm makes it easy to switch cord from one side to the other when making turns . . . holds the cord to either side, out of the way of the operator to provide the same advantages as "flop over" handles without hazards of such a handle without a stop. "On-Off" switch is right on top of handle. 3-wire ground-type cord (No. 14AWG), is insulation rated at 600v minimum. **Replacement Cord:** Part No. 47-435.

ATLAS TOOL & MANUFACTURING CO., 5147 Natural Bridge Blvd., St. Louis, Missouri 63115

the new GRASS JET SERIES by Atlas Aire

5 GREAT CUSTOMER-KEYED MODELS—New *Grass Jet Series H* by Atlas Aire. One of the most important new mower series in the market today. *Series H* goes straight to the heart of America's new trade-up market. Offers your customer more most-wanted features at a fully competitive price. Here's the solid, long-lasting strength they're looking for. *Plus* a new deck with special 5-year warranty. New Grass Jet deflector/chute for low clog efficiency and clean-as-a-whistle ejection of clippings. Here is big horsepower Briggs & Stratton performance . . . out-to-the-edge trimming—left side . . . rake front-end . . . new 5-Position Quick-A-Matic cutting height adjustors . . . and dozens more.

Model H20D—3 H.P. with "Easy Spin" rewind starter. 20″ DEEP DECK ROTARY. 19″ blade. Cutting Heights: 1-3/16″—1¾″—2-5/16″—2⅞″—3-7/16″. Net Weight: 45 lbs. Shipping Weight: 54 lbs.

Model H20SP—3 H.P. with "Easy Spin" Wind-A-Matic starter. 20″ SELF-PROPELLED DEEP DECK ROTARY. 19″ blade. Cutting Heights: 1¼″—2″—2¾″—3½″. Net Weight: 60 lbs. Shipping Weight: 69 lbs.

Model H22D—3½ H.P. with "Easy Spin" rewind starter. 22″ DEEP DECK ROTARY. 21″ blade. Cutting Heights: 1¼″—1-13/16″—2⅜″—3″—3½″. Net Weight: 63 lbs. Shipping Weight: 72 lbs.

Model HP22—3½ H.P. with "Easy Spin" rewind starter. 22″ SELF-PROPELLED DEEP DECK ROTARY. 21″ blade. Cutting Height: 1¼″—1-13/16″—2⅜″—3″—3½″. Net Weight: 76 lbs. Shipping Weight: 85 lbs.

Model HE20—1¼ H.P. 20″ *ELECTRIC* DEEP DECK ROTARY. 19″ blade. Cutting Heights: 1″—1⅝″—2-3/16″—2¾″—3-5/16″. UL approved. Net Weight: 50 lbs. Shipping Weight: (including cord) 66 lbs.

Replacement Blades: No. 1-75 for Models H20D, H20SP, and H20E. No. 1-77 for Models H22D and HP22.

SPECIFICATIONS: Blade: 19 or 21″ austempered steel. **Engine:** 4-cycle 3 or 3½ H.P. Briggs & Stratton. **Handle:** T-Type chrome with Hi-Lo Stor-Mower feature. **Controls:** Choke-A-Matic on handle. Safety handle drive control on self-propelled models disengages forward drive when pushed down for turns or emergency. **Housing:** 14 gauge steel. **Chute:** Grass Jet combination deflector/chute. **Dual Purpose Leaf Mulcher Attachment:** Attaches quickly with single wing nut. **Front:** Austempered steel rake-type front housing plate. **Wheels:** Steel rim, painted white with 8″ semi-pneumatic tires. **Wheel Bearings:** Shielded and permanently lubricated ball bearings. **Colors:** Deluxe red with engine in contrasting Starline White. Grass Catcher No. 119-17 available for all Series H models.

NEW SERIES H DECK WARRANTY—The mower manufacturer warrants each new deck against defects in material or workmanship under normal use and service; (excluding commercial and/or rental units), our obligation under this warranty being limited to make good at the factory, or authorized service stations, on any part or parts thereof which shall, within five years, after delivery of such deck to the original purchaser, be returned to us or authorized service station, WITH TRANSPORTATION CHARGES PREPAID, and which our examination shall disclose to our own satisfaction to have been thus defective, this warranty being expressed in lieu of all other warranties expressed or implied, and of all other obligations and liabilities on our part.

Grass Jet Series H SELLS with MOST-WANTED Features

New "Grass Jet" Deflector/Chute extends into deck to pick up and direct clippings out to the right rear in a steady stream. Clippings do not build up at the edge of the deck . . . do not hit operator when making turns.

Rake-Type Front End makes the new H Series easier to push in heavy, tall grass.

Leaf Mulcher Attachment: Mulches leaves. Also use to re-cut clippings extra fine when lawn is dry to provide mulch protection against summer sun.

New 5-Position Quick-A-Matic Wheel Cutting Height Adjustment: Spring-held lever can be easily moved to any of five different height adjustment positions. Three positions on H20SP.

Grass Catcher: Optional on all Deep Deck Series H models. Quickly disposes of all leaves and clippings as you mow. Keeps lawn picture perfect.

Shielded Ball Bearing Wheels make Atlas-Aire mowers easier rolling . . . give added protection against sand and dirt damaging bearings.

Handle Lock on all models except self-propelled. Stor-Mower handle saves space in storage . . . locks in space-saving vertical position.

Self-Propelled Models: Rugged, heavy-duty self-propelled drive . . . pinions synchronized with ground-gripping gear tread on rear tires. Safety handle control disengages drive automatically when pushed down.

ATLAS TOOL & MANUFACTURING CO., 5147 Natural Bridge Blvd., St. Louis, Missouri 63115

Riding Mower

Customer-Keyed, Heavy Duty Rider Performs Dozens of Jobs All Year Round with Snow and Yard Cart Accessories

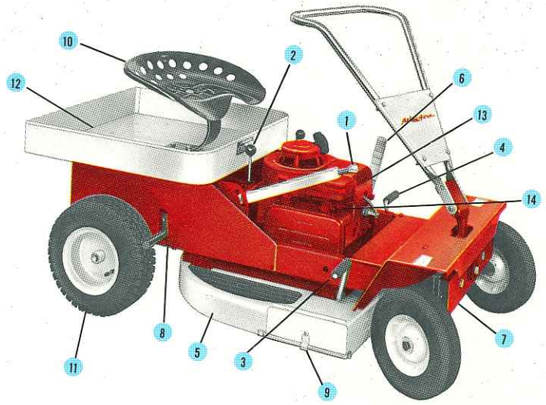

MODEL R-25A—4 H.P. 24″ RIDING MOWER. 24″ blade. (Replacement blade No. 1-79.) 2 speeds forward. 2 speeds reverse. Mulcher Plate included. Net Weight: 224 lbs. Shipping Weight: 239 lbs.

SPECIFICATIONS

1. On-the-go cutting height adjustment to 2, 2½, 3 or 3½ inches.

2. Gear transmission with 2 speeds forward and 2 reverse.

3. Unique safety clutch. Push down for power . . . release and mower is in neutral.

4. Full-power foot brake.

5. Heavy steel deck for long life.

6. Blade clutch release. Allows you to use mower without blade turning. Blade stops instantly.

7. Floating pivot-type front axle. Gives you full steadying control over rough ground. (Inside turning radius 22 inches.)

8. Chain drive to automotive-type skidless differential.

9. Permanently lubricated ball bearings for blade drive and idler. No need to lubricate under mower.

10. Spring cushion tractor-type seat. Can be adjusted for maximum leg and seating comfort.

11. Fully-pneumatic 12″ rear tires mounted on steel wheels.

12. Handy under-seat "Carry-all."

13. 4 H.P., 4 cycle Briggs & Stratton engine. "Easy-Spin" rewind starter.

14. Convenient engine choke plus throttle control on engine.

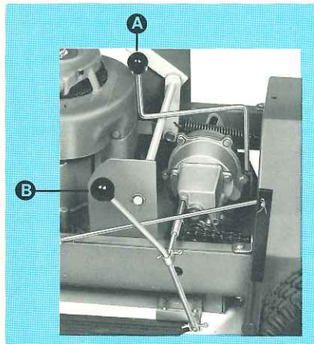

GEAR TRANSMISSION: (A) Forward, neutral, reverse gear shift lever. (B) Pull out for low speed, push in for high speed. Center is neutral.

AUTOMOTIVE TYPE DIFFERENTIAL: Gives full power on the turns . . . eliminates wheel skid from power drive.

BL-65 SNOW BLADE: 30″ wide x 12″ high. 3 settings for straight ahead or 30° left or right. Pushes deep drifts easily. Lifts with lever to carrying position. Clears rough ground with semi-floating action. Attaches quickly to brackets with 2 cotter pins.

TC-12 SNOW CHAINS: Add greater traction to rear wheels of Rider Mower for plowing snow in uphill and ice cover conditions.

SC-25 SEAT CUSHION: Extra comfort while you ride! Soft foam filled; vinyl covered.

PC65 YARD CART: Big 2¾ bushel capacity (level) for rakeup; compost; leaf carrying; dirt hauling; and dozens of moving jobs around house and garden. Strength to carry 300 lbs. Chrome bike-type wheels with semi-pneumatic tires. Bright red with Starline white trim to match Rider Mower.

WT-65 WAGON TONGUE ACCESSORY: Easily attaches to Yard Cart. Instant hook up and unhooking for use with riding mower or small tractor.

ATLAS TOOL & MANUFACTURING CO., 5147 Natural Bridge Blvd., St. Louis, Missouri 63115

The Price-Pleasing COMPACTS the staggered wheel mowers by ATLAS AIRE 5 Customer-Keyed Models

Rotary Compacts

MODEL A20C—3 H.P. 20″ ROTARY COMPACT. 19″ blade. "Easy-Spin" rewind starter.Cutting Heights: 1½″—2¼″—3″. Net Weight: 45 lbs. Shipping Weight: 54 lbs.

MODEL B20C—3 H.P. 20″ ROTARY COMPACT. 19″ blade. "Easy-Spin" Wind-A-Matic starter. Cutting Heights: 1¼″—2″—2¾″. 3-position Quick-A-Matic height adjustment standard. Net Weight: 54 lbs. Shipping Weight: 64 lbs.

MODEL A22B—3 H.P. 22″ ROTARY COMPACT. 21″ blade. "Easy-Spin" rewind starter. Cutting Heights: 1½″—2¼″—3″. Net Weight: 54 lbs. Shipping Weight: 64 lbs.

MODEL B22A—3 H.P. 22″ ROTARY COMPACT. 21″ blade. "Easy-Spin" Wind-A-Matic starter. Cutting Heights: 1½″—2¼″—3″. 3-position Quick-A-Matic height adjustment standard. Net Weight: 63 lbs. Shipping Weight: 72 lbs.

MODEL SP22B—3 H.P. 22″ SELF-PROPELLED ROTARY COMPACT. 21″ blade. "Easy Spin" rewind starter. Cutting Heights: 1¼″—2″—2¾″. 3-position Quick-A-Matic height adjustment standard. Net Weight: 70 lbs. Shipping Weight: 80 lbs.

Replacement Blades: No. 1-75 for Models A20C and B20C. No. 1-77 for Models A22B, B22A and SP22B.

SPECIFICATIONS—Blade: 19 or 21″ austempered steel. **Engine:** 4 cycle, 3 H.P. Briggs & Stratton. **Controls:** Choke-A-Matic on handle. Handle-mounted starter release on Wind-A-Matic models. **Housing:** 16 gauge steel—20″ deck models; 14 gauge steel—22″ deck models. Staggered wheels. **Baffle:** Reduces clogging, creates suction for even cutting. **Handle:** Chrome Stor-Mower. Locks upright in storage. Hi-Lo adjustment (2 positions, 5″ differential). **Wheels:** Steel rim painted white; 7″ diameter—20-inch models. 8″ diameter—22-inch models. With semi-pneumatic tires and ball bearings. **Trimming Edge:** ½-inch. **Cutting Heights:** (See individual models.) **Color:** Deluxe Red finish with engine in contrasting Starline White. **Wheel extender and Leaf Mulcher:** Included as standard equipment. **Grass Catcher:** No. 119-14 available for Models A20C and B20C. No. 119-15 available for A22B, B22A and SP22B.

QUICK-A-MATIC WHEEL ADJUSTMENT: Spring-held lever can be easily moved to any of three different height adjustment positions. Quick-A-Matic wheel adjustment kit (No. 23-36AS) is available for Models A20C and A22B.

WIND-A-MATIC STARTER: Just wind the crank, release the finger-tip control on handle to start engine.

BAFFLE: The curved shield at the back gives rounder contour to the cutting chamber, creates suction that pulls grass upright for quicker, even cutting. It also prevents clogging, and serves as an extra steel guard between blade and operator.

Precision Lawn Care with Atlas Aire Self-Propelled Reel Mowers 2 Customer-Keyed Models

Reel Mowers

MODEL RL-18A—2 H.P. 18″ SELF-PROPELLED REEL MOWER. Net Weight: 96 lbs. Shipping Weight: 104 lbs.

MODEL RL-21A—2 H.P. 21″ SELF-PROPELLED REEL MOWER. Net Weight: 100 lbs. Shipping Weight: 108 lbs.

SPECIFICATIONS—Engine: 4 cycle, 2 H.P. Briggs & Stratton. **Starter:** "Easy-Spin" rewind. **Controls:** Choke-A-Matic control and drive control on handle. **Drive:** Diamond roller chain sprocket. **Wheels:** 10½″ diameter, semi-pneumatic tires, easy height adjustment. **Blades:** 6″ diameter reel; 5 austempered alloy steel knives. **Handle:** Chrome, Stor-Mower (locks upright for storage). **Color:** Deluxe red finish with engine in contrasting Starline White. **Accessories:** Grass Catcher, Part No. 119-4; Grease gun service kit, Part No. 23-31.

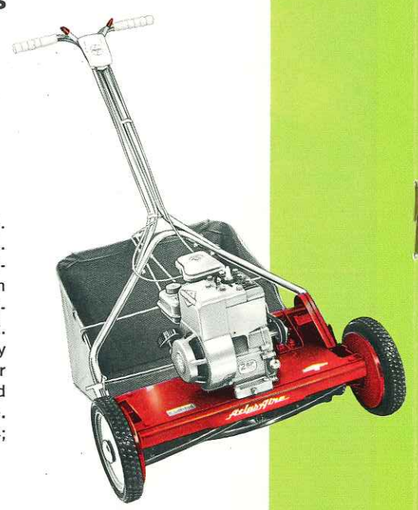

TAPERED ROLLER BEARINGS on Atlas-Aire Reel Mowers give precision cutting action and help retain accuracy of adjustment.

RUGGED STEEL SIDE PLATE Accurate, long-life construction.

FULL-RANGE CUTTING HEIGHTS Three wheel adjustments and 7 roller adjustments provide full range of cutting heights from ⅝″ to 2½″.

IDLER ACTIVATED V-BELT CLUTCH Cushions shocks to engine. Idler has permanently lubricated ball bearings.

For the BIG Jobs... Atlas Aire Big HD100A Heavy Duty Rotary

Customer-Keyed Featuring Heavy-Duty V-belt Drive and Manual Safety Clutch

Heavy Duty Rotary

MODEL HD100A—3 H.P. 22″ HEAVY DUTY DEEP DECK ROTARY. 21″ blade. (Replacement blade No. 1-77.) **Cutting Heights:** 1¼″—1¾″—2¼″—2¾″—3¼″. Catcher No. 119-10 extra. Net Weight: 90 lbs. Shipping Weight: 100 lbs.

SPECIFICATIONS—Blade: 21″ austempered, belt-drive. **Engine:** 4 cycle, 3 H.P. Briggs & Stratton, "Easy-Spin" rewind starter. **Controls:** Choke-A-Matic control on handle; safety blade clutch. **Housing:** 14 gauge steel; 22-inch deck; rear baffle; new rake-type front for easier handling in heavy grass; dual quick port openings with hinged mulching covers. **Handle:** Heavy-duty tubular steel with chrome finish; cross-braced at yoke and at grips. **Steel White Wheels:** 12-inch diameter, rear; 8-inch front; ball bearings. **Color:** Deluxe red finish.

QUICK-ACTION HINGED PORT COVERS: Open one or both ports to permit discharge of clippings. Close both ports for leaf mulching.

12-INCH REAR WHEELS . . . roll easier and last longer.

HEAVY DUTY V-BELT BLADE DRIVE: Reduces engine strain . . . adds smooth, safe operation. Blade shaft turns on sealed, permanently lubricated ball bearings. Clutch permits stopping blade without stopping engine.

HEAVY DUTY GUARANTEE—If engine crankshaft is bent or broken when mower is in residential use by original purchaser, factory will repair or replace engine. This guarantee extends for the full life use of the mower.

Big Wheel

Commercial / Institutional & Estate Models
Customer-Keyed

Quickly Pay For Themselves In Greater Mowing Efficiency and Reduced Man-Hours

Commercial / Institutional Power Mower

MODEL BW100—4 H.P. 24″ blade.
(Replacement blade No. 1-79.)
Net Weight: 128 lbs.
Shipping Weight: 142 lbs.

SPECIFICATIONS

1. Four fast-change, positive-lock positions for rear wheel cutting height adjustment. Matching adjustments: 1″—1¾″—2½″—3¼″ through use of bronze bushings on front wheel mounts.

2. Heavy gauge ⅞″ tubular steel frame.

3. Double-V-Belt drive with adjustable tension.

4. 4 cycle, 4 H.P. Briggs & Stratton engine; "Easy-Spin" rewind starter.

5. Horizontal shaft; centrifugal-actuated clutch on shaft for easier starting.

6. 20-inch heavy duty type nylon cord pneumatic tires mounted on chrome-plated steel rims.

7. Chrome-plated hubs . . . ball bearings.

8. Heavy zinc-plated adjustable spokes.

9. 14-gauge steel blade housing; side discharge.

10. Adjustable two-position handle.

11. Front wheel mounts can be locked or allowed to swivel freely.

- **Cuts Costly Man-Hours**
- **The Rugged Big Wheel Model**
- **Built For Heavy-Duty, Trouble-Free Service**
- **Designed To Roll Smoothly Over Rough Ground and Soft Turf**

ADJUSTABLE SWIVEL-ARM MOUNT: Sintered bronze bushings spaced above or below swivel arm mount on front wheels match rear wheel height adjustments. The separate bushings cover the four-heights cutting range. Each wheel swivels on Zerk grease-fitted needle bearing. The two front wheel mounts can be locked by use of the attachable bar. This provides stability for greater operating ease when mowing over rough ground or on terraces.

SMOOTH UNDERDECK: With generous side discharge chute . . . keeps clippings flowing freely, prevents clogging. Heavy-duty austempered steel blade trims to ½″.

SMOOTH POWER: Power transmission through use of the heavy-duty double V-belt drive gives smooth yet powerful drive to the rotary blade. The belts are of quarter-turn construction for better contact and longer life. The blade shaft turns on sealed, permanently lubricated ball bearings for long service and smooth operation.

ADJUSTABLE REAR WHEELS: Quick, easy method to adjust cutting height. Lock nuts need only be loosened, the wheel shifted to desired slot, and lock nuts tightened. Slot angle uses upward thrust of wheel axle to maintain locked position.

The Country Gentleman Estate Mowers

MODEL M310—3½ H.P. 22″ SELF-PROPELLED COUNTRY GENTLEMAN. 21″ blade. (Replacement blade No. 1-77.) Net Weight: 103 lbs. Shipping Weight: 115 lbs.

MODEL M110—3½ H.P. 22″ PUSH-TYPE COUNTRY GENTLEMAN. 21″ blade. (Replacement blade No. 1-77.) Net Weight: 93 lbs. Shipping Weight: 105 lbs.

SPECIFICATIONS—Blade: 21″ austempered. **Engine:** 4 cycle, 3½ H.P. Briggs & Stratton. **Starter:** "Easy-Spin" rewind. **Drive on Self-Propelled Model:** power delivered to ground-gripping gear-tread tires at rear through synchronized pinions. **Controls:** Choke-A-Matic control and special blade engagement control both mounted on handle. **Blade Drive:** Heavy duty V-belt. Blade shaft turns on sealed, permanently lubricated ball bearings. **Housing:** 14 gauge steel. Rake-type front for easier pushing in tall grass. Blade trims out to ½-inch from left side of the mower. **Chute:** New "Grass Jet" deflector/chute extends into deck to pick up and direct clippings out in a steady stream. **Dual-Purpose Leaf Mulcher Attachment:** Attaches quickly with single wing nut. Mulches leaves. Also use to cut clippings extra fine when lawn is dry to provide mulch protection against summer sun. **Front:** New austempered rake-type front housing plate for easier handling in heavy grass. **Handle:** Chrome heavy-duty plow type. **Wheels:** Rear—16-inch bicycle type; chrome. Front—8-inch steel rim, painted white. Both with semi-pneumatic tires, plus shielded and permanently lubricated ball bearings. **Cutting Heights:** ⅞″—1⅝″—2⅜″—3⅛″. **Colors:** Deluxe Red and contrasting Starline White. Grass Catcher No. 119-17 available for both models.

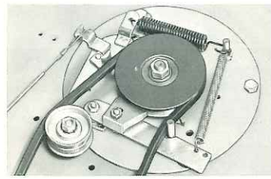

Blade Engagement Control (mounted on handle) provides easier, safer starting by permitting operator to start the engine before engaging blade. Blade also can be stopped when transporting, crossing walks, etc.

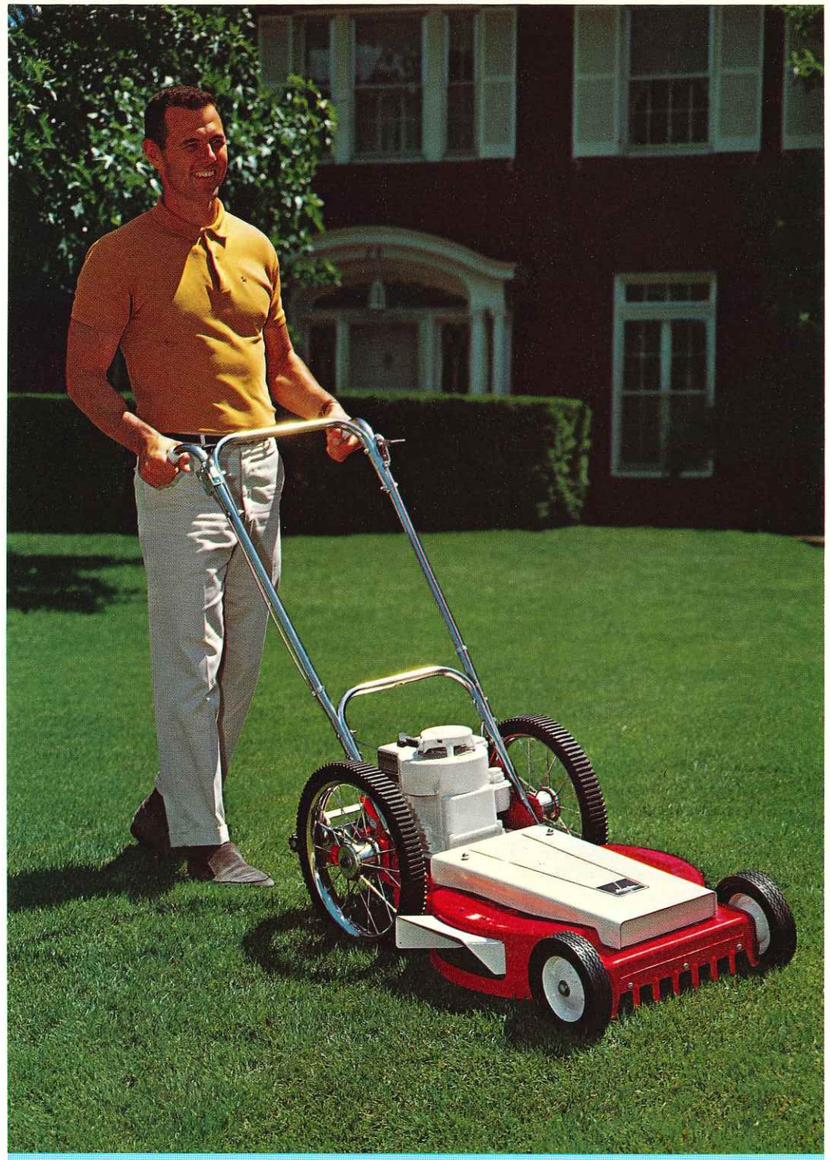

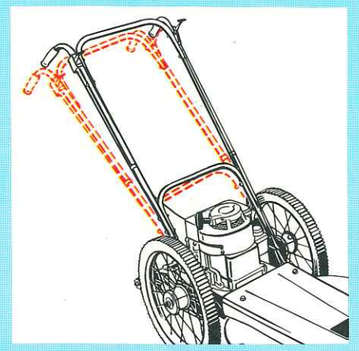

Exclusive Atlas Aire Drive Control on the M310 is virtually semi-automatic. Push handle ahead as you start and self-propelled drive is engaged . . . hold it back as you stop and it's disengaged. No levers to flip . . . hands stay on the grips to maintain control of the mower at all times.

M310 Self-Propelled Drive is rugged, heavy-duty. Pinions synchronized with ground-gripping gear tread on rear tires to give positive traction in all conditions.

A Complete Line of
Rotary Power Tillers
3 Customer-Keyed Models

Rotary Power Tillers

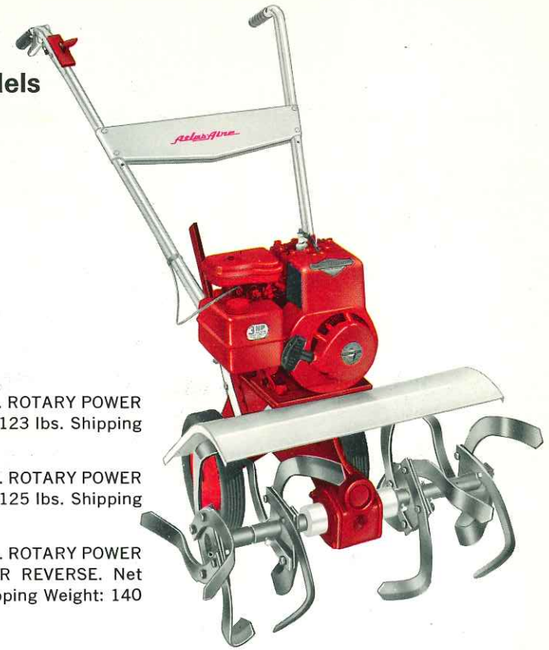

MODEL T-100—3 H.P. ROTARY POWER TILLER. Net Weight: 123 lbs. Shipping Weight: 133 lbs.

MODEL T-200—4 H.P. ROTARY POWER TILLER. Net Weight: 125 lbs. Shipping Weight: 135 lbs.

MODEL T-300—4 H.P. ROTARY POWER TILLER WITH POWER REVERSE. Net Weight: 130 lbs. Shipping Weight: 140 lbs.

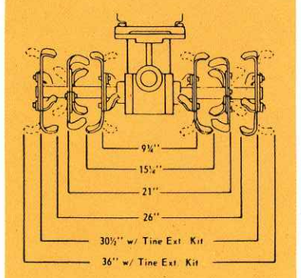

VERSATILE BOLT-ON EXTENSION TINES

- **Available for All 3 Tiller Models**
- **Increase Tilling Width From 26" to 36"**

On and off in a jiffy. Atlas Aire Bolt-On Extension Tines boost tilling width an extra 10" where the job requires. Available for all 3 tiller models at modest cost . . . Part No. 84-16.

For narrow spaces, cut tilling width down to as little as 9¼" by simply removing one or two pairs of the standard equipment tines. Command up to a total of 6 widths with extensions.

SPECIFICATIONS—Engine: 3 or 4 H.P. 4 cycle Briggs & Stratton (see model). **Starter:** "Easy-Spin" rewind. **Controls:** T-100—Choke-A-Matic. T-200 and T-300—throttle on handle. T-300 only—handle-mounted reverse control. **Transmission:** Worm, strain-tempered steel; worm gear, bronze, cast on steel hub. **Depth Stick:** Adjustable to provide selected tilling depth. **Tines:** 16 bolo tine blades; 14" diameter; high carbon steel. Fender shield. **Tilling Width:** 26" with extension available to increase tilling width to 36". **Wheels:** 10 x 1.75 Retract-A-Matic (retractable for tilling). Sintered iron bearings. **Bearings:** Input shaft; sealed ball bearings. Output shaft; needle bearings, protected by oil seals. **Pulleys:** Idler pulleys spring-loaded to limit maximum force applicable. Sealed ball bearings. Drive pulleys machined cast iron for maximum gripping action. **Drive Belt:** Heavy-duty; oil and heat resistant.

BETTER CONTROL
Idler pulleys are spring-loaded to maintain equal and balanced tension on belts. The belts are heavy-duty, and oil and heat resistant for long life.

FENDER SHIELD
Full-width over tines keeps engine and operator protected from soil turned up by tilling action.

FURROWING TOOL AVAILABLE
Till and furrow at the same time with this handy tool that fits all four Atlas Aire models. Part No. 23-35.

TILLER DRIVE

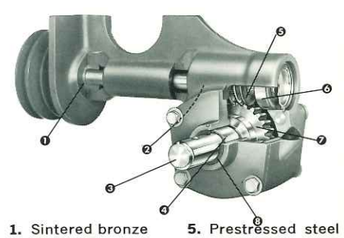

1. Sintered bronze bearing oil impregnated.
2. Sealed ball bearing.
3. Prestressed steel shaft.
4. Needle bearing.
5. Prestressed steel worm.
6. Sealed ball bearing.
7. Bronze worm gear.
8. Delrin cup. Keeps sand out of shaft.

Edger/ Trimmer

Three-Wheel Design for Balance In Any Edging or Trimming Position

MODEL B-10—2 H.P. EDGER/TRIMMER. 9" blade. (Replacement blade No. 1-34.) Net Weight: 48 lbs. Shipping Weight: 56 lbs.

SPECIFICATIONS—Engine: 4 cycle, 2 H.P. Briggs & Stratton. **Starter:** "Easy-Spin" rewind. **Controls:** Choke A-Matic engine control and Crank-A-Matic cutting-height adjustment on handle. **Blade:** Austempered steel; blade shaft turns on two double-shielded ball bearing units. **Housing:** Welded steel on ¼" x 1" steel chassis framing. **Wheels:** 8-inch, rubber tires, steel rim, sintered iron bearings. **Handle:** Tubular bail type painted white. **Color:** Deluxe red with white trim.

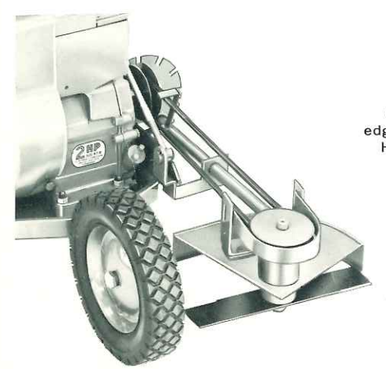

6-POSITION BLADE ADJUSTMENT
Gives range from narrow edging to blade-length trim. Height of blade regulated by Crank-A-Matic adjustment on handle.

Power Mower Replacement Blades

Faster Service than Sharpening . . . and More Profit, too!

FIT 95% OF ALL MOWERS
Center hole 1" diameter.
Use bushing to reduce to ⅜".

ORIGINAL EQUIPMENT BLADES
Part No.
1-34—9" blade on Edger/Trimmer.
1-75—19" blade on all 20-inch mowers.
1-77—21" blade on all 22-inch mowers including Heavy Duty and Country Gentleman series.
1-79—24" blade used on R-25A Riding Mower and BW100 mower.
15-5—Blade mounting adapter used with all 19" and 21" blades except Heavy-Duty, Country Gentleman and staggered wheel models.
15-13—Blade mounting adapter for all staggered wheel models.

FREE DISPLAY STAND
with every BD-3 assortment.
Displays full range of sizes, offset or flat, complete with adapters. Storage shelf on back of display for blade hardware and literature.

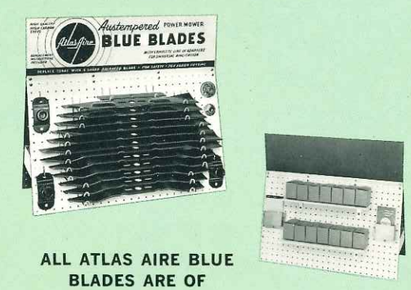

ALL ATLAS AIRE BLUE BLADES ARE OF AUSTEMPERED STEEL.

ATLAS TOOL & MANUFACTURING CO., 5147 Natural Bridge Blvd., St. Louis, Missouri 63115

Invite that Trade-Up Customer Right Inside with Customer-Keyed Atlas Aire Sales Aids

They're FREE

ENVELOPE STUFFERS
On the complete line of Atlas Aire mowers and tillers. Fits standard 6¾ envelope. Use as envelope stuffer in mailings, as counter pieces in store, or as handouts during special promotions.

REPRO PROOFS (line)
1-15/16″ wide. Handy for use in catalog or other literature. Line proofs lend themselves to reduction or enlargement for offset or letterpress plates.

WINDOW STREAMERS
Two-color streamer, 28″ x 11″ with space to list size and price of featured mower. Use in windows, on walls, or over wires. Excellent for stirring up value excitement for mower department.

NEWSPAPER MATS
One-column width with art designed headline and layout. Powerful sales message. Descriptive copy included. Dealer merely inserts price and adds store name and address.

NATIONAL ADVERTISING REPRINTS
Reprints of Atlas Aire ads for counter or window display.

Better Homes and Gardens

House & Garden

House Beautiful

Flower and Garden

Better Homes & Gardens GARDEN IDEAS for 1966

Flower Grower

the Home Garden

GLOSSY PHOTOS
8 x 10 size. Have complete specifications alongside product picture. Handy for floor selling. Quick reference on any model.

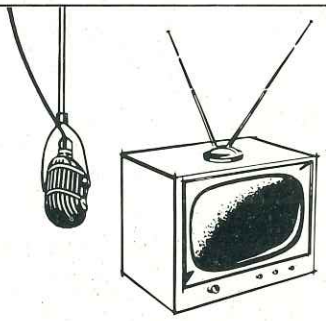

RADIO & TV COMMERCIALS
1-minute announcements that are also easily adaptable to 20 to 30 second spots. Factual and persuasive.

ATLAS TOOL & MANUFACTURING CO., 5147 Natural Bridge Blvd., St. Louis, Missouri 63115

NOW! All Those Trade-Up Features and YOU set the price!

with Bellaire

The PRICE-PLEASER LINE from ATLAS

Wide Profit Margin in the Hottest Competition Situations

OUT TO THE EDGE TRIMMING! Blade Trims Out To ½-Inch From Both Sides.

BELLAIRE Model J22B

Blade: 21″ austempered steel. **Engine:** 4-cycle, 3 H.P. Briggs & Stratton. Choke-A-Matic control. "Easy-Spin" rewind starter. **Housing:** 14-gauge steel. **Ports:** 2 for maximum grass discharge. One port cover included. **Baffle:** Curved baffle at rear to reduce clumping and give faster, cleaner cutting. **Trimming Edge:** Out to ½-inch from either side. **Wheels:** 7-inch diameter; sintered iron bearings; easy height adjustment. **Handle:** Bail type. **Color:** White engine and handle. Green housing. **Net Weight:** 52 lbs. **Shipping Weight:** 60 lbs.

BAFFLE The curved shield at the back gives rounder contour to the cutting chamber, creates suction that pulls grass upright for quicker, even cutting. It also prevents clogging, and serves as an extra steel guard between blade and operator.

Accessories:

Leaf Mulcher. . Part No. 10-84

Quick-A-Matic Wheel Adjuster Kit . . . Part No. 23-36AS

Grass Catcher . . Part No. 119-10

AtlasAire

ATLAS TOOL & MANUFACTURING CO.

Founded in 1926

5147 Natural Bridge Blvd. • St. Louis, Missouri 63115

Meet and Beat Competitive Challenges with Profit-Making BELLAIRES!

The Price Pleaser Line

BELLAIRE Model D20B **Blade:** 19″ austempered steel; **Engine:** 4-Cycle, 3 H.P. Briggs & Stratton, Choke-A-Matic control; "Easy-Spin" rewind starter; **Housing:** 16-gauge steel, 20″ deck, staggered wheel; **Baffle:** Curved non-clog design gives greater safety and more grass-lift suction for cleaner, faster cutting; **Trimming Edge:** ½″; **Wheels:** 7″ diameter, oil impregnated sintered iron bearings, easy height adjustment, front wheel extension; **Handle:** Bail type; **Color:** White engine and handle; green deck; **Net Weight:** 44 lbs.; **Shipping Weight:** 52 lbs.

Accessories: Leaf Mulcher . . . . . Part No. 12-51
Quick-A-Matic Wheel Adjuster Kit . . . . . Part No. 23-36AS
Grass Catcher. . . . . Part No. 119-14

Full Margin!

BELLAIRE Model D22B-3 **Blade:** 21″ austempered steel; **Engine:** 4-Cycle, 3 H.P. Briggs & Stratton, rewind starter, Choke-A-Matic control; **Housing:** 14-gauge steel, 22″ deck, staggered wheel; **Baffle:** Curved, non-clog design gives greater safety and more grass-lift suction for cleaner, faster cutting; **Trimming Edge:** ½-inch; **Wheels:** 7″ diameter, oil impregnated sintered iron bearings, easy height adjustment, front wheel extension; **Handle:** Bail type; **Color:** White engine and handle, green deck; **Net Weight:** 53 lbs.; **Shipping Weight:** 61 lbs.

Accessories: Leaf Mulcher . . . . . Part No. 12-27
Quick-A-Matic Wheel Adjuster Kit . . . . . Part No. 23-36AS
Grass Catcher. . . . . Part No. 119-15

FRONT WHEEL EXTENDER

Maintains deck clearance when mowing over dips, rough lawns, and terrace inclines. Extender with each D20B and D22B-3 along with instruction folder on care and operation of engine and mower.

REPLACEMENT BLADES

Model D20B . . . . . Blade No. 1-75
Model D22B-3 . . . . . Blade No. 1-77
Model J22B . . . . . Blade No. 1-77
Blade Adapter for all the above 15-13

FREE! AD MATS & GLOSSY PHOTOGRAPHS

Order early! Have 'em ready to stir up value excitement in the mower department.

ATLAS TOOL & MANUFACTURING CO.

5147 Natural Bridge Blvd. • St. Louis, Missouri 63115

BMC 66